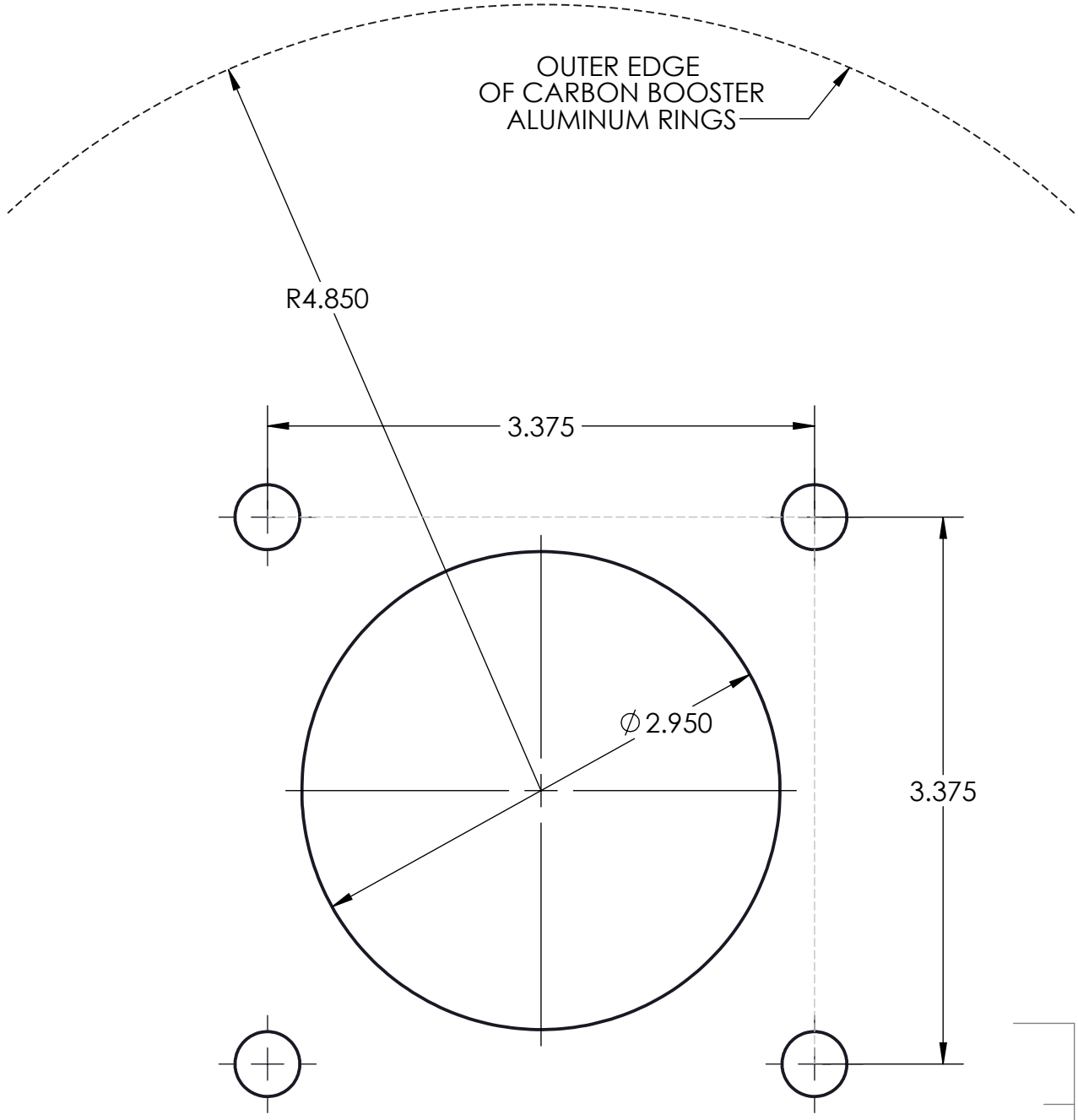

CARBONX
BRAKE BOOSTER
by Master Power Brakes

www.mpbrakes.com (888) 351-8781

Use provided ruler to verify template has printed to scale

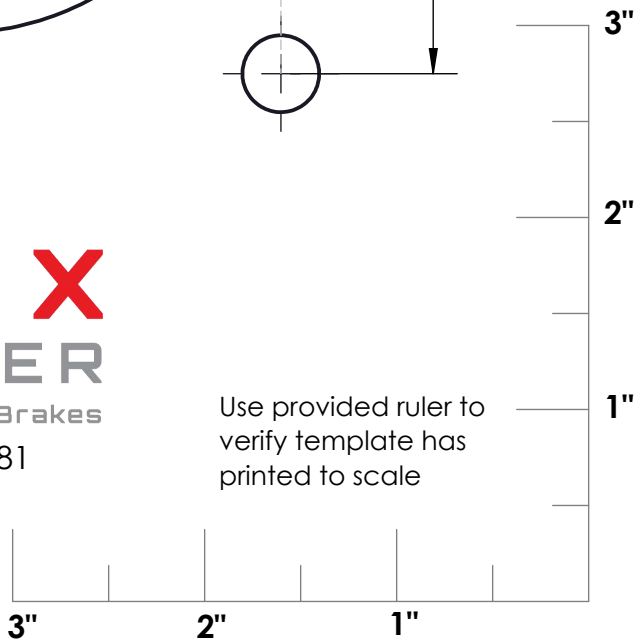

MPB-F400-35 (REV 5/18/2021)